Energy, Engines and People

National Museum of Flight Scotland

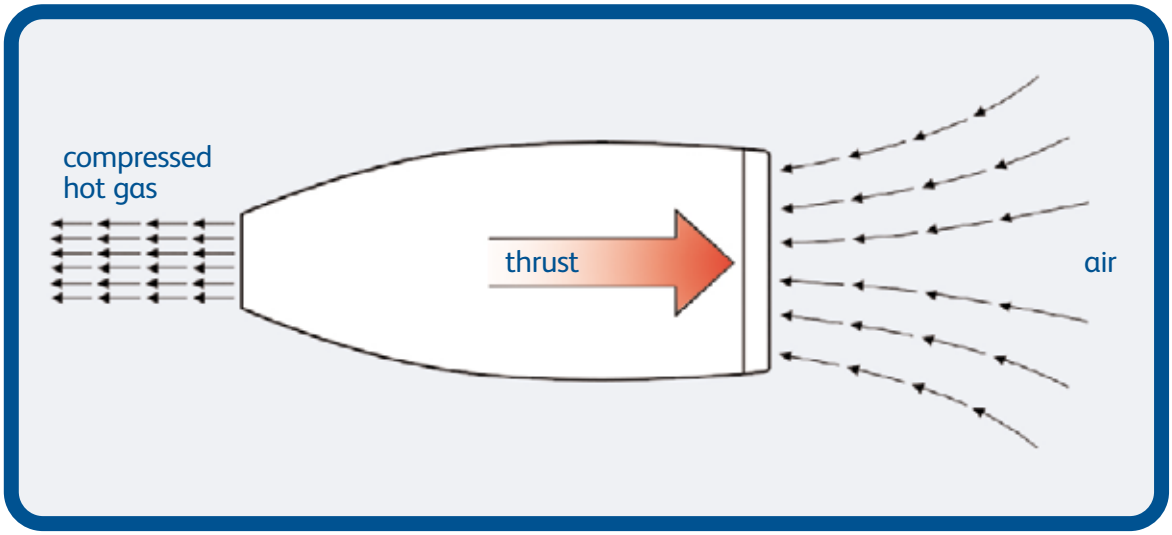

Illustration by Terry Pasteur

Teachers' Resource Pack

Why do engines need fuel? Why do people need to eat? How does energy change? Can we see it changing?

A visit to the National Museum of Flight, and its interactive science exhibition, Fantastic Flight, offer pupils an excellent opportunity to study the topic of energy.

Linking directly to the collections this pack will help you prepare for a visit, make better use of your visit and follow up with activities back at school.

National
Museum of Flight
Scotland

Energy, Engines and People

Fantastic Flight floor plan

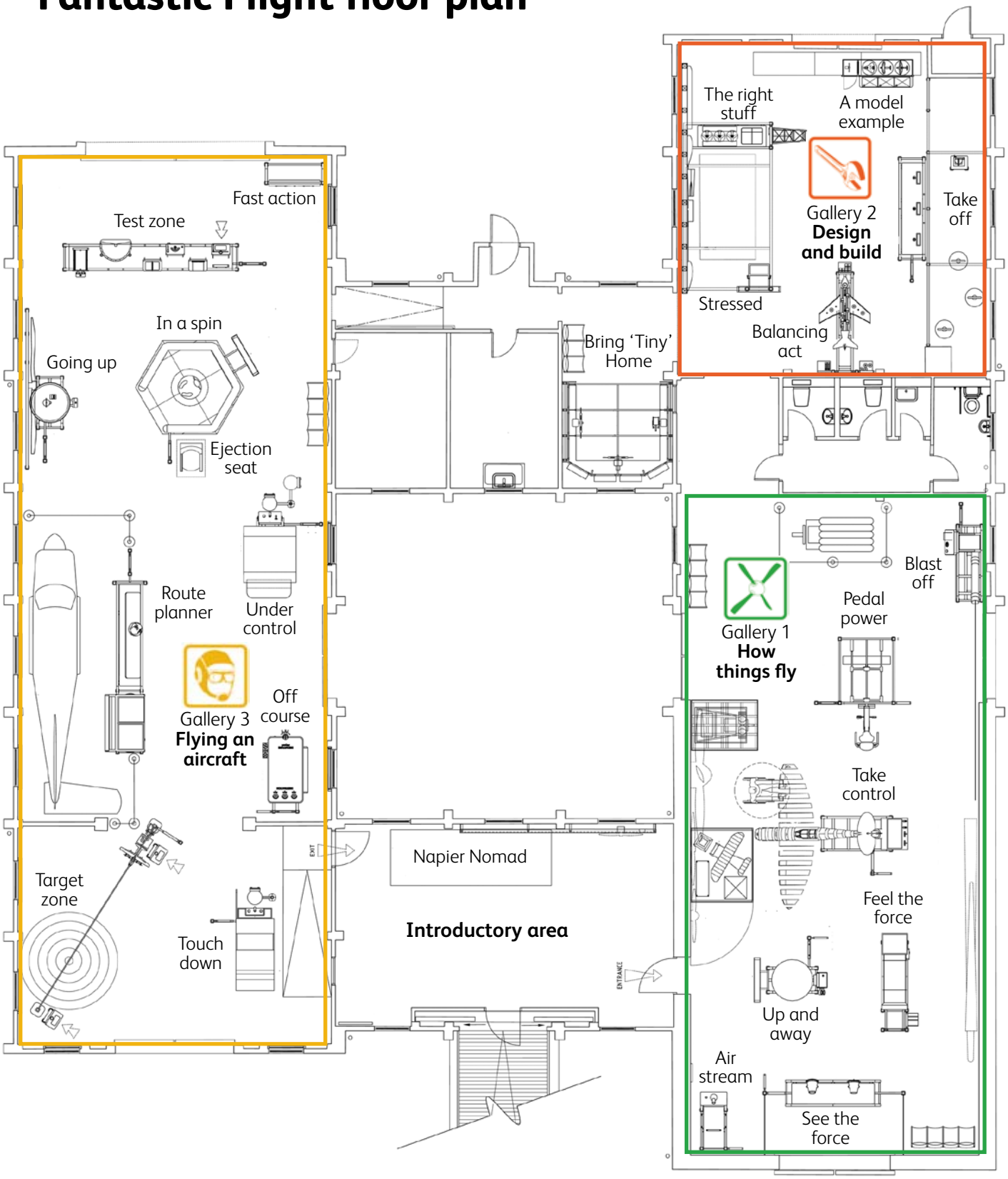

Contents

Something to do – Burning off chocolate buttons

30 minutes

Key question

What did we do at lunch time?

Why?

Choose 4 pupils.

Give them 5 chocolate buttons each (about 10 calories).

Give them each an activity to do.

Ask the class to guess how long each one will have to do it to use up their chocolate button and who would use it first.

Set the pupils doing their activities and stop them when they have used up their chocolate buttons.

Science – 5 chocolate buttons are about 10 calories. Exercise uses up energy and the more strenuous it is the more energy is used up. Below is the amount of energy used per hour by different activities.

Activities

Resting 80–100 calories per hour, so 10 calories will be used in about 7 minutes

Walking 110–160 calories per hour, so 10 calories will be used in about 5 minutes

Cycling 170–240 calories per hour, so 10 calories will be used in about 3 minutes

Running 250–350 calories per hour, so 10 calories will be used in about 2 minutes.

Before you visit

Something fun to make - Cotton reel roller

20 minutes

Science This a toy where children take chemical energy in their bodies (food) turn it into kinetic energy (the pencil turning round) to elastic energy (stored in the elastic band) which turns back into kinetic energy.

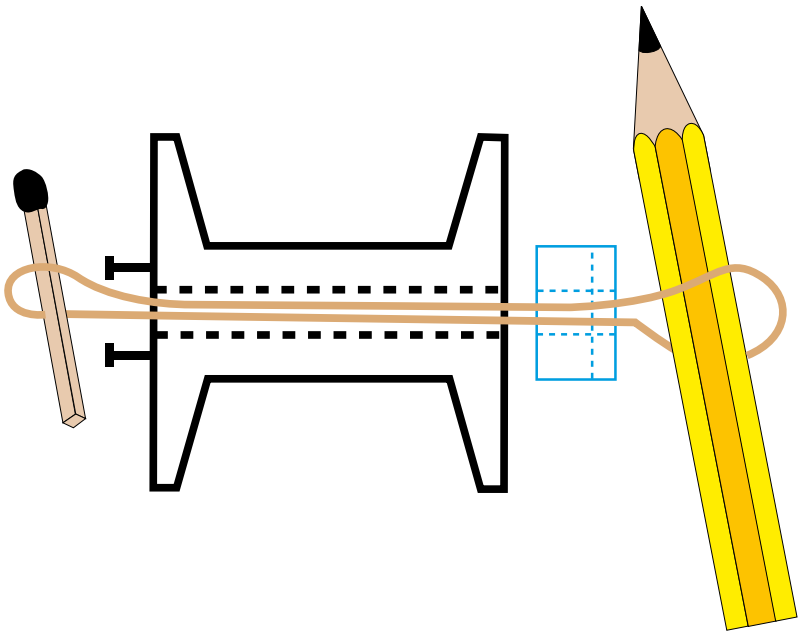

A toy children can wind up and then it will roll on its own down the table.

What you will need

- Matches – cut the heads off normal matches or buy craft matches.
- Pencils – any will do but shorter ones are better.
- Elastic Bands – shorter ones work better.
- Wax Candles – Cut them into 1cm lengths. This is made easier by microwaving them for 2 minutes. Or warming the blade of the knife. They then need a hole through the middle. This can be made using something sharp or hot (be careful!)
- Cotton reels – ask pupils to bring them in or order them from a craft supplier.

Instructions

1. Put the Elastic Band through the middle of the cotton reel.
2. Put a match through one end.
3. Put another match through the spokes of the cotton reel. This will stop the first match turning when you wind up your elastic band.
4. Thread a piece of candle on the other end.
5. Put a pencil through the other end.
6. Start to turn the pencil round and round to wind it up.
7. Put it down on the table and let it go.
8. You can have distance or speed races. Put the result on a chart on the wall. What can you do to make them go further/faster?

An introduction to the science

There are various types of energy. These can be changed from one type of energy to another but energy is never destroyed.

Light Energy	Anything that is giving off light.
Kinetic Energy	Anything that is moving.
Thermal Energy	Anything that gives off heat.
Chemical Energy	Anything with stored energy that is released by a chemical reaction.
Sound Energy	Anything that makes a noise.
Gravitational Potential Energy	Anything that can fall.
Elastic Energy	Anything that is stretched or compressed.

Fantastic Flight

The Napier Nomad

Background

Diesel engines are usually put in trains and trucks because they are heavy and slow running but this is an aeroplane engine. This one is unusual as there is a turbine (part of a jet engine) attached to the exhaust to reclaim energy from the exhaust. Despite being designed over 50 years ago, engineers are now studying it again because of its fuel efficiency.

Science

The processes of using fuel or food *(chemical energy)* and turning it into movement *(kinetic energy)* take place in both humans and engines.

We can use our five senses to detect these processes and see what they have in common and what is different.

Activity

Each child should have a copy of the activity sheet. Ask them to draw the engine in the oblong box and themselves in the square box.

The Napier Nomad Answers

Key questions

Imagine the engine was running.

What would you

- Hear?
- See?
- Taste?
- Smell?
- Feel?
- Hear?
- Would it be very noisy?

Hear?

It would be very noisy. As the engine runs, with small explosions happening in each cylinder, the engine shakes, kinetic energy. The air around it shakes and the vibrations in the air, sound energy, reach your ear.

See?

You would see the engine move, kinetic energy, but you would not see any light energy unless something went wrong and it caught fire.

Taste/Smell?

These senses are closely related. You might taste diesel on the air. Why is there diesel? Why can you taste it? Diesel is a fuel, so chemical energy, that we turn into movement, kinetic energy . If you taste it on the air it is because it is not being fully burnt. (This is a good point to explain that in any energy transfer there is the useful energy, in this case movement, and the wasted energy. Noise, heat, vibration etc are all energy you cannot use. This engine was a clever design because the turbine at the back (the silver coloured bit) regained some of the wasted energy.)

Feel?

When this engine had its full propellers you would not be able to stand here. You would be blown away. This is the useful energy. As the air is pushed backwards there is a force that pushes the aeroplane forward. Since it is to do with movement this is kinetic energy.

Key question

You usually see aeroplanes up in the air, if you turn the engines off will they stay still?

Answer

No they fall! The aeroplane uses a lot of energy to get up into the air. Since that energy does not disappear the aeroplane still has that energy.

The Napier Nomad
Activity sheet

Draw a picture of the Napier Nomad Engine in this box.

Draw a picture of yourself running in this box. How would energy be getting into the engine?

How would energy be coming out?

How would energy be getting into you?

How would energy be getting out?

Write on words with arrows to show the energy and how you might be sensing it?

What would you hear, smell, see?

When you visit

Fantastic Flight

Interactives to use for this topic

40 minutes

Air Cannon

- Ask for a volunteer.
- Ask them to pull back the handle.

Key question

- **Has any energy has been transferred?**

Answer: Yes the volunteer has put elastic energy into the interactive.

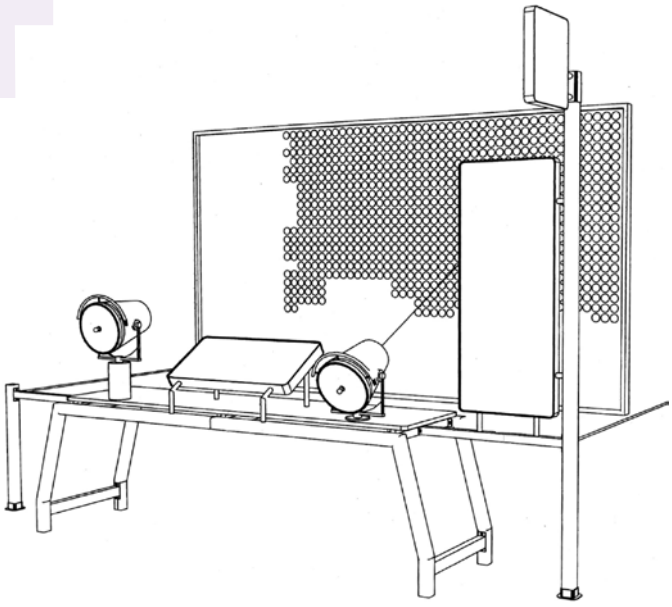

- Ask the volunteer to let go of the handle.

Key question

- **What happened? What changes in energy happened and how the energy got to the mirror wall?**

Answer: The elastic energy turned into kinetic energy as the exhibit moved the air, though this was invisible it was this kinetic energy which was then transferred to the mirror wall.

Energy, Engines and People

Thrust – Propeller Propulsion

- Choose a volunteer – stand them next to the exhibit

Key question

- **What types of energy does the volunteer have?**

Answer: Thermal or Heat – the person is warm
Chemical – sugars and fat stored in their body.

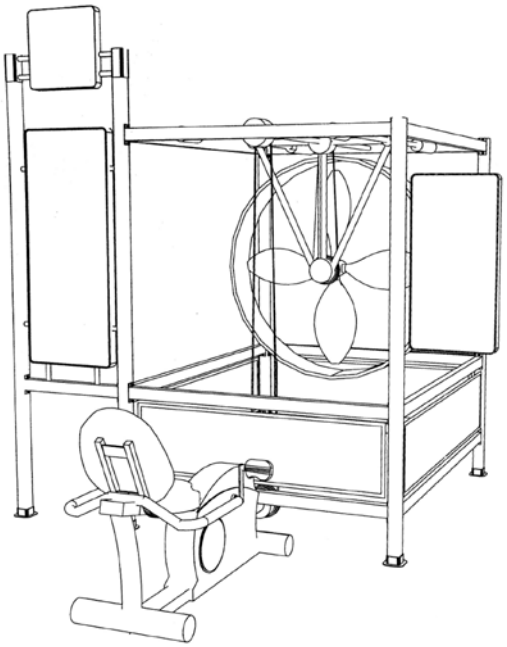

- Ask the volunteer to sit on the exhibit and pedal.
- Ask the pupils to put their hands near the fans.
- Ask the pupils if they can feel a lot of wind?

  Answer: Some but nothing like as much as with an engine
- Ask the volunteer if it is hard work.
  (If they say no get them to go faster.)

Key question

- **Do you think aircraft engines need to be very powerful or not?**

Drop Zone

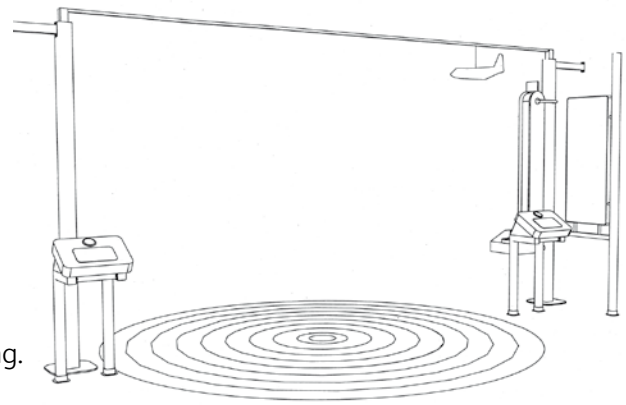

- Choose a volunteer to load the parcel.
- Ask the pupils what types of energy the parcel has.

  Answer: Potential
- Ask a volunteer to launch the plane and try to hit the drop zone.
- Ask the pupils what types of energy the parcel has when it is in the aeroplane and the aeroplane is moving.

  Answer: Kinetic and Potential.

Key question

- **What happens to the energy the parcel the energy has once the aeroplane drops it?**

Answer: The Potential Energy is changing to Kinetic as it falls. Some of its energy is being dispersed into the air as a result of drag (also known as air resistance.)

Military Hangar
The Komet Me163, rocket fighter.

Key question

Is the propeller on the front of this aeroplane big enough to move it through the air?

Answer: No the propeller actually acts as a windmill to make electricity to power the dials in the aeroplane. This is a rocket aeroplane.

Did you know? In the rocket that powers this aeroplane hydrogen peroxide (also used as a hair bleach) and methanol (a type of alcohol) reacted violently together to make high pressure steam. This aeroplane could fly very fast but only for 8 minutes.

Star Object

Hangar 2
The RB2-11, large jet engine.

Key question

Why is this engine so big?

Answer: It is for big aeroplanes! However it helps it to be powerful but quiet.

Did you know? This engine has a big fan to blow air more slowly around the outside of the main engine. Not only does this create more thrust (move the aeroplane forward more quickly) but it also makes it quieter. One of the problems is that jet engines turn quite a lot of the energy they make into noise rather than thrust.

Star Object

Hangar 4
Concorde, supersonic airliner.

Key question

What helped Concorde to be fast?

Answer: It had powerful engines but it also was streamlined. This means it was pointy like a dart so the air slowed it down less.

Did you know? The engines on Concorde had after burners, devices to squirt more fuel into the exhaust and get even more power. However this was very inefficient and when the aircraft ran at full power it used the equivalent of 33,000 litres an hour. An average family car uses 33 litres a week.

Star Object

Experiment - Calculating the calories in food

30 minutes

Key question

What's a calorie?

A calorie is the amount of energy required to raise 1 gram of water by 1 degree Celsius. In terms of dieting, we usually talk about kilocalories (which is 1000 calories), and the energy required to raise 1 kg of water by 1degree Celsius. If you take in more energy than you expend, your body stores it in a convenient form for later use: fat.

Key question

We have all seen food packets rated by calories but how do scientists calculate food calories?

Food calories are calculated by putting food into a "calorimeter" and burning it. The calorimeter measures the energy released as the food burns completely. According to Wikipedia, the human body is on average 85 % efficient in converting a food's energy to energy the body can use, so the calorie labels on food are only 85 % of the energy read by the calorimeter.

What you need

- You will need an area where you can burn small quantities of food with the children watching and something to burn the food on.
- Test tube with a measured 5ml of water in it (use a medicine spoon from the pharmacist).
- Held by a stand or tongs.
- Thermometer
- Cigarette Lighter
- Food samples
- Scales that can weigh 5g of each food – butter, bread, celery, potato

Instructions

1. Explain to the pupils how calories are calculated.
2. Show them a range of foods.
3. Get them to guess which will burn better and which has the most calories.
4. Burn the food under the test tube and measure how much the temperature goes up.
5. Calculate how many calories were in the food.
6. Note - Be aware that because the test tube heats up and not all the food will burn your calculations will not be very accurate.

Experiment – Changing Energy

30 minutes

This is quite a playful activity but gets children thinking more broadly about changes in types of energy.

Science
Energy is all around us and changing from one type to another all the time. Remember energy changes but is never lost.

You will need

- Marbles
- Cardboard boxes
- Elastic bands
- Assorted craft materials
- Candles
- Stereo

Instructions
Give your pupils a range of craft materials and tell them you want them to show you changes in types of energy. The more able pupils will be able to work some out for themselves otherwise do the following demonstrations and ask them to tell you.

1) **Dropping marbles into a tin**
Chemical energy in their body becomes potential energy as they lift the marble. This becomes kinetic energy as the marble drops. Most of this energy is then turned into sound when it hits the tin.

2) **Light a candle**
Chemical energy tuned into light and heat (one for the teacher to do!)

3) **Cardboard box guitar**
Stretch elastic bands across a cardboard box and then strum like a guitar. Chemical energy in the pupil and elastic energy in the bands is turned into sound.

4) **Jumping up and down**
Chemical energy in the pupil is turned into kinetic and potential energy, and probably some sound.

5) **Piece of paper near a stereo speaker**
Electricity turns into sound and then into kinetic energy as the paper moves.

6) **The sun**
What energy does the sun give out? Light and heat. How do plants use it? They store it as chemical energy to allow them to grow. How do animals use it? Thay eat plants or other animals that eat plants to get energy. Cold blooded animals warm themselves in the sun to get going in the morning.

Experiment – Energy = Mass x Velocity^2

30 minutes

The science of this is quite complicated but allows children to develop their own experiments.

Science:

Energy of a moving object = Mass x Veloctiy X Velocity

Or Energy = Weight x Speed x Speed

This is part of the science that was later developed into Einstein's theory of relativity that related to the speed of light: $E=mc^2$

This experiment can prove the above equation, showing that speed is a larger factor in calculating the energy of a moving object than weight.

You will need

- Play-Doh or similar
- Marbles of different sizes
- Rulers

Instructions

1. Ask the pupils to roll out pancakes of play do.
2. Ask them to drop a big marble and a small marble from 30cm above then 60cm above.
3. Get them to measure how deep the holes are. To do this they can put a pencil in the hole, hold it where it goes into the hole, then measure from their fingers to the end of the pencil.
4. The small marble dropped from a greater height should make a deeper hole than the big marble dropped from the lower height.
5. Ask them how they might test this further. Different sized marbles, different heights?
6. This is how scientific rules are made, someone has an idea and then tests it, and then changes their ideas if it does not match the results.